Base Mounted Single Reeved 2 Ton

4 Part Single Reeving 4/1

To complete Model Number insert following in place of ◊ / ‡.

◊ S for Single Speed or V for Variable Drive

‡ 4 [for 460/(480) V] or 2 [for 230/(240 V)]

WT (lb): Weight without Variable Drives

Note: Control Box can be mounted or shipped on any Base mounted hoist

Note 2: Lifting Speed available in 24 FPM

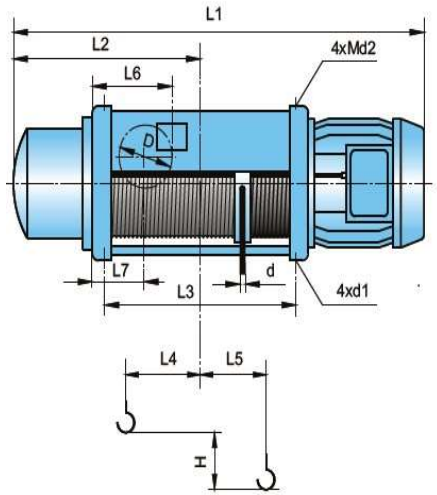

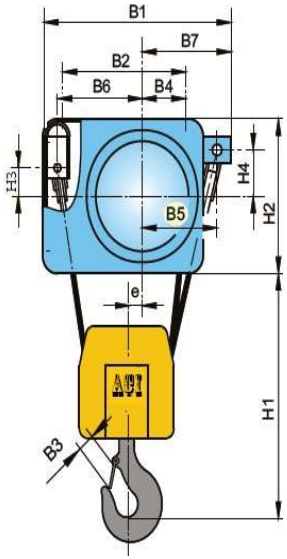

Lift Speed (FPM)	Hoist Motor (HP)	Rated Current	
		240 V (Amp)	480 V (Amp)
16	2.41	10.6	5.3
24	3.67	11.5	5.8

Model Number	Lift (FT)	Lift Speed (FPM)	Rope Dia. (mm)	L1 (in)	L2 (in)	L3 (in)	L4 (in)	L5 (in)	L6 (in)	L7 (in)	B1 (in)	B2 (in)	B3 (in)	B4 (in)	B5 (in)	B6 (in)	B7 (in)	H1 (in)	H2 (in)	H3 (in)	H4 (in)	D (in)	d (in)	d1 (in)	d2	e (in)	Wt (lb)
WRBM00416N021410‡	21			36.4	16.5	16.9	3.5	1.8																			426
WRBM00416N033410‡	33			44.3	20.5	24.8	7.5	-1.8	9.8	6.3	25.6	11.6		4.1	7.5	7.7	9.0		12.6	2.8	3.0	5.5		0.6	M14	1.0	495
WRBM00416N044410‡	44	16	7	52.2	24.4	32.6	11.4	-3.7					1.6					16.3					0.3				563
WRBM00416N056410‡	56			56.1	26.4	33.1	12.1	-4.5	11.8	7.6											3.6	7.9					631
WRBM00416N067410‡	67			60.2	28.2	36.7	13.6	-5.1	13.8	8.5	28.7	12.8		5.0	8.1	7.8	10.0		14.4	3.4	4.0	9.5		0.7	M20	0.6	WOR

2721 NE 4th Ave, Pompano, FL 33064 | 1-888-4-A-HOIST

Visit WWW.ACIHOIST.COM for the most current information

Base Mounted Single Reeved 2.5 Ton

4 Part Single Reeving 4/1

To complete Model Number insert following in place of ◊ / ‡.

◊* S for Single Speed or V for Variable Drive

‡ 4 [for 460/(480) V] or 2 [for 230/(240 V)]

WT (lb): Weight without Variable Drives

Note: Control Box can be mounted or shipped on any Base mounted hoist

Note 2: Lifting Speed available in 24 FPM

Lift Speed (FPM)	Hoist Motor (HP)	Rated Current	
		240 V (Amp)	480 V (Amp)
16	2.41	10.6	5.3
24	3.67	11.5	5.8

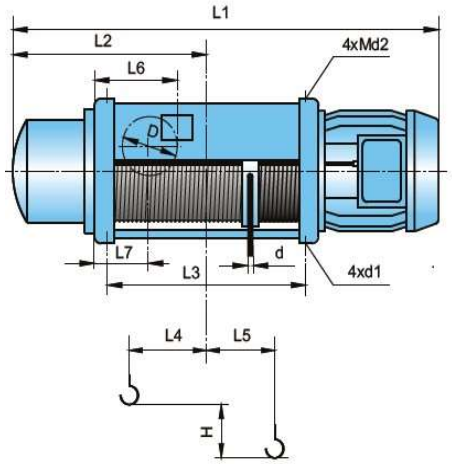

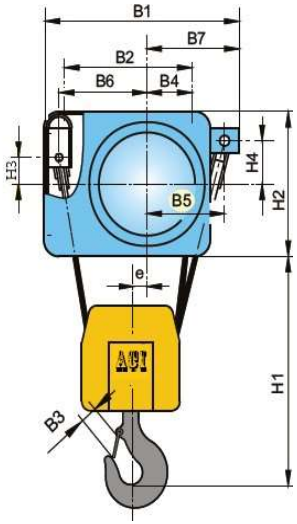

Model Number	Lift (FT)	Lift Speed (FPM)	Rope Dia. (mm)	L1 (in)	L2 (in)	L3 (in)	L4 (in)	L5 (in)	L6 (in)	L7 (in)	B1 (in)	B2 (in)	B3 (in)	B4 (in)	B5 (in)	B6 (in)	B7 (in)	H1 (in)	H2 (in)	H3 (in)	H4 (in)	D (in)	d (in)	d1 (in)	d2	e (in)	Wt (lb)
WRBM00516N02141◊‡	21			36.4	16.5	16.9	3.5	1.8																			426
WRBM00516N03341◊‡	33			44.3	20.5	24.8	7.5	-1.8	9.8	6.3	25.6	11.6		4.1	7.5	7.7	9.0		12.6	2.8	3.0	5.5		0.6	M14	1.0	495
WRBM00516N04441◊‡	44	16	7	52.2	24.4	32.6	11.4	-3.7																			563
WRBM00516N05641◊‡	56			56.1	26.4	33.1	12.1	-4.5	11.8	7.6			1.6					16.3			3.6	7.9	0.3				631
WRBM00516N06741◊‡	67			60.2	28.2	36.7	13.6	-5.1	13.8	8.5	28.7	12.8		5.0	8.1	7.8	10.0		14.4	3.4	4.0	9.5		0.7	M20	0.6	WOR

2721 NE 4th Ave, Pompano, FL 33064 | 1-888-4-A-HOIST

Visit WWW.ACIHOIST.COM for the most current information

Base Mounted Single Reeved 3 Ton

4 Part Single Reeving 4/1

To complete Model Number insert following in place of ◊ / ‡.

◊ S for Single Speed or V for Variable Drive

‡ 4 [for 460/(480) V] or 2 [for 230/(240 V)]

WT (lb): Weight without Variable Drives

Note: Control Box can be mounted or shipped on any Base mounted hoist

Lift Speed (FPM)	Hoist Motor (HP)	Rated Current	
		240 V (Amp)	480 V (Amp)
16	4.80	21.0	10.5
24	7.40	22.6	11.3

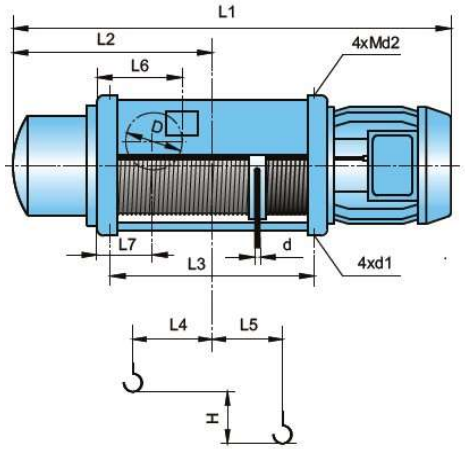

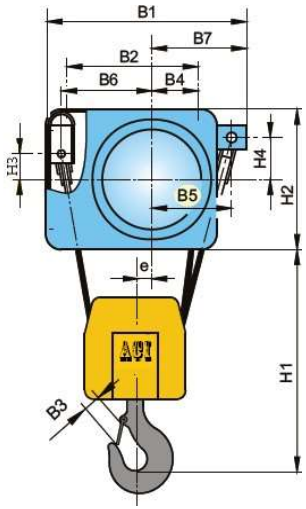

Model Number	Lift (FT)	Lift Speed (FPM)	Rope Dia. (mm)	L1 (in)	L2 (in)	L3 (in)	L4 (in)	L5 (in)	L6 (in)	L7 (in)	B1 (in)	B2 (in)	B3 (in)	B4 (in)	B5 (in)	B6 (in)	B7 (in)	H1 (in)	H2 (in)	H3 (in)	H4 (in)	D (in)	d (in)	d1 (in)	d2	e (in)	Wt (lb)
WRBM00616N02041◊‡	20	16	10	40.4	18.5	17.4	2.6	1.0	11.8	7.6	28.7	12.8	2.0	5.0	7.8	10.0	8.1	26.0	14.4	3.4	3.6	7.9	0.4	0.7	M20	0.6	583
WRBM00616N03141◊‡	31			48.2	22.4	25.2	6.5	-1.0																			667
WRBM00616N04341◊‡	43			56.1	26.4	33.1	10.4	-3.0																			750
WRBM00616N05441◊‡	54			63.2	29.2	37.0	10.7	-2.4	15.9	10.3	33.5	15.4		6.2	9.3	12.2	10.0		17.5	4.3	4.6	11.5		0.8	M24	0.6	856
WRBM00616N06641◊‡	66			73.0	33.9	45.4	17.9	-7.5																			WOR

2721 NE 4th Ave, Pompano, FL 33064 | 1-888-4-A-HOIST

Visit WWW.ACIHOIST.COM for the most current information

Base Mounted Single Reeved 5 Ton

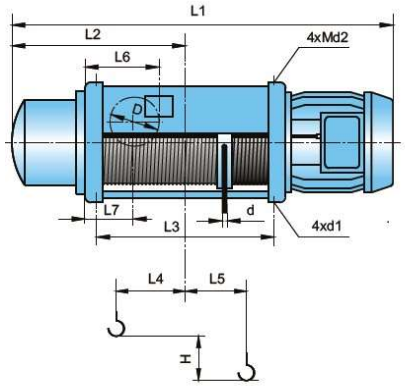

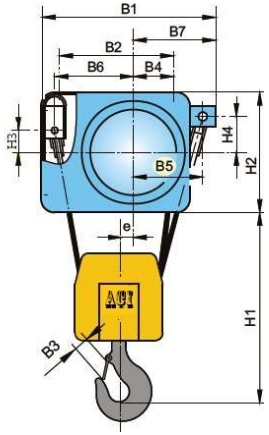

4 Part Single Reeving 4/1

To complete Model Number insert following in place of ◊ / ‡.

◊ S for Single Speed or V for Variable Drive

‡ 4 [for 460/(480) V] or 2 [for 230/(240 V)]

WT (lb): Weight without Variable Drives

Note 1: Control Box can be mounted or shipped on any Base mounted hoist

Note 2: Lifting Speed available in 24 FPM

Lift Speed (FPM)	Hoist Motor (HP)	Rated Current	
		240 V (Amp)	480 V (Amp)
16	4.80	21.0	10.5
24	7.40	22.6	11.3

Model Number	Lift (FT)	Lift Speed (FPM)	Rope Dia. (mm)	L1 (in)	L2 (in)	L3 (in)	L4 (in)	L5 (in)	L6 (in)	L7 (in)	B1 (in)	B2 (in)	B3 (in)	B4 (in)	B5 (in)	B6 (in)	B7 (in)	H1 (in)	H2 (in)	H3 (in)	H4 (in)	D (in)	d (in)	d1 (in)	d2	e (in)	Wt (lb)
WRBM01016N02041◊‡	20	16	10	40.4	18.5	17.4	2.6	1.0	11.8	7.6	28.7	12.8	2.0	5.0	7.8	10.0	8.1	26.0	14.4	3.4	3.6	7.9	0.4	0.7	M20	0.6	583
WRBM01016N03141◊‡	31			48.2	22.4	25.2	6.5	-1.0																			667
WRBM01016N04341◊‡	43			56.1	26.4	33.1	10.4	-3.0																			750
WRBM01016N05441◊‡	54			63.2	29.2	37.0	10.7	-2.4	15.9	10.3	33.5	15.4		6.2	9.3	12.2	10.0		17.5	4.3	4.6	11.5		0.8	M24	0.6	834
WRBM01016N06641◊‡	66			73.0	33.9	45.4	17.9	-7.5																			WOR

2721 NE 4th Ave, Pompano, FL 33064 | 1-888-4-A-HOIST

Visit WWW.ACIHOIST.COM for the most current information

Base Mounted Single Reeved 7.5 Ton

4 Part Single Reeving 4/1

To complete Model Number insert following in place of ◊ / ‡.

◊ S for Single Speed or V for Variable Drive

‡ 4 [for 460/(480) V] or 2 [for 230/(240 V)]

WT (lb): Weight without Variable Drives

Note 1: Control Box can be mounted or shipped on any Base mounted hoist

Note 2: Lifting Speed available in 24 FPM

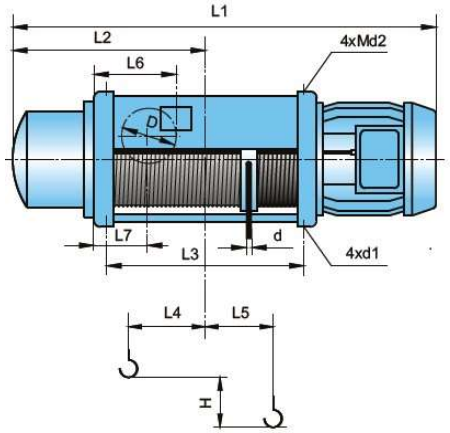

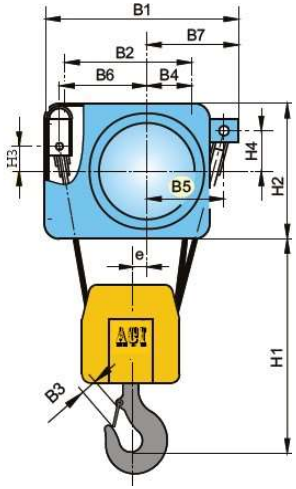

Lift Speed (FPM)	Hoist Motor (HP)	Rated Current	
		240 V (Amp)	480 V (Amp)
16	7.37	24.0	12.0
24	12.1	31.2	15.6

Model Number	Lift (FT)	Lift Speed (FPM)	Rope Dia. (mm)	L1 (in)	L2 (in)	L3 (in)	L4 (in)	L5 (in)	L6 (in)	L7 (in)	B1 (in)	B2 (in)	B3 (in)	B4 (in)	B5 (in)	B6 (in)	B7 (in)	H1 (in)	H2 (in)	H3 (in)	H4 (in)	D (in)	d (in)	d1 (in)	d2	e (in)	Wt (lb)
WRBM01516N020410◊‡	20	16	12	42.9	19.5	19.3	2.6	1.4	13.8	8.5	28.7	12.8	2.2	5.0	7.8	10.0	8.1	22.2	14.4	3.4	4.0	9.5	0.5 (0.4)	0.7	M20	0.6	686
WRBM01516N030410◊‡	30			51.6	23.8	28.0	7.0	-0.8																			790
WRBM01516N039410◊‡	39			60.2	28.2	36.7	11.3	-2.8																			896
WRBM01516N049410◊‡	49			68.9	32.5	45.3	15.6	-4.9																			1001
WRBM01516N030410◊‡	30		15	60.6	28.2	34.4	12.4	-4.7	15.8	9.1	18.7	15.4		6.2	10.0	9.3	12.2		17.0	4.3	4.6	11.5		0.8	M24	0.6	789
WRBM01516N039410◊‡	39			64.8	30.3	38.5	14.5	-5.7																			895
WRBM01516N061410◊‡	61			71.7	33.9	45.4	17.9	7.5																			WOR

2721 NE 4th Ave, Pompano, FL 33064 | 1-888-4-A-HOIST

Visit WWW.ACIHOIST.COM for the most current information

Base Mounted Single Reeved 10 Ton

4 Part Single Reeving 4/1

To complete Model Number insert following in place of ◊ / ‡.

◊ S for Single Speed or V for Variable Drive

‡ 4 [for 460/(480) V] or 2 [for 230/(240 V)]

WT (lb): Weight without Variable Drives

Note 1: Control Box can be mounted or shipped on any Base mounted hoist

Note 2: Lifting Speed available in 24 FPM

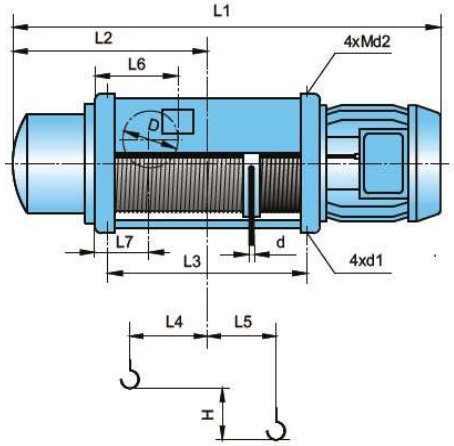

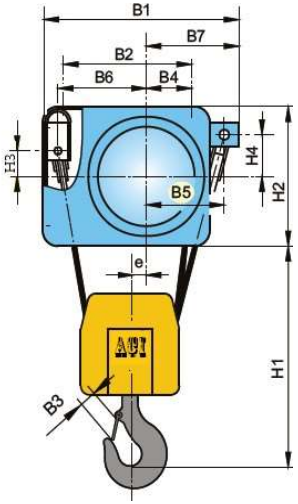

Lift Speed (FPM)	Hoist Motor (HP)	Rated Current	
		240 V (Amp)	480 V (Amp)
16	13	44.9	22.5
24	19.4	57.4	28.0

Model Number	Lift (FT)	Lift Speed (FPM)	Rope Dia. (mm)	L1 (in)	L2 (in)	L3 (in)	L4 (in)	L5 (in)	L6 (in)	L7 (in)	B1 (in)	B2 (in)	B3 (in)	B4 (in)	B5 (in)	B6 (in)	B7 (in)	H1 (in)	H2 (in)	H3 (in)	H4 (in)	D (in)	d (in)	d1 (in)	d2	e (in)	Wt (lb)
WRBM02016N020410◊‡	20	16	15	46.7	20.9	20.5	2.4	1.8	15.9	10.3	33.5	15.4	2.8	6.2	9.3	12.2	10.0	27.4	17.5	4.3	4.6	11.5	0.6 (0.5)	0.8	M24	0.6	1094
WRBM02016N030410◊‡	30			54.9	25.0	28.7	6.5	-0.3																			1244
WRBM02016N039410◊‡	39			63.2	29.2	37.0	10.7	-2.4																			1394
WRBM02016N049410◊‡	49			71.5	33.3	45.3	14.8	-4.6																			1544
WRBM02016N059410◊‡	59			79.7	37.4	53.5	18.9	-6.5																			WOR
WRBM02016N066410◊‡	66		18	82.7	39.2	53.3	20.2	-8.0	19.7	12.8	39.4	18.7		7.4	11.5	14.5	12.2		20.9	5.0	5.0	14.2		1.0	M27	0.9	WOR

2721 NE 4th Ave, Pompano, FL 33064 | 1-888-4-A-HOIST

Visit WWW.ACIHOIST.COM for the most current information

Base Mounted Single Reeved 15 Ton

4 Part Single Reeving 4/1

To complete Model Number insert following in place of ◊ / ‡.

◊ S for Single Speed or V for Variable Drive

‡ 4 [for 460/(480) V] or 2 [for 230/(240 V)]

WT (lb): Weight without Variable Drives

Note 1: Control Box can be mounted or shipped on any Base mounted hoist

Note 2: Lifting Speed available in 24 FPM

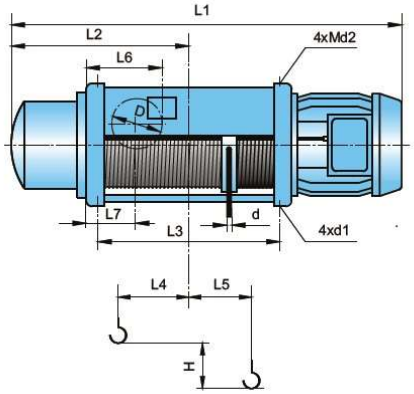

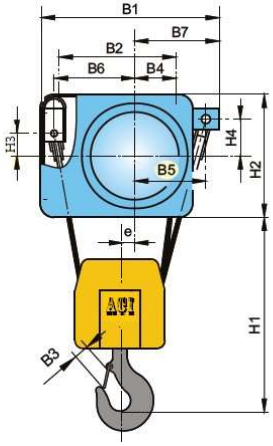

Lift Speed (FPM)	Hoist Motor (HP)	Rated Current	
		240 V (Amp)	480 V (Amp)
16	16.8	74.0	37.0
24	24.9	54.8	27.4

Model Number	Lift (FT)	Lift Speed (FPM)	Rope Dia. (mm)	L1 (in)	L2 (in)	L3 (in)	L4 (in)	L5 (in)	L6 (in)	L7 (in)	B1 (in)	B2 (in)	B3 (in)	B4 (in)	B5 (in)	B6 (in)	B7 (in)	H1 (in)	H2 (in)	H3 (in)	H4 (in)	D (in)	d (in)	d1 (in)	d2	e (in)	Wt (lb)
WRBM03016N026410◊‡	26	16	18	56.3	25.0	28.7	6.5	-0.3	15.9	10.3	33.5	15.4	2.8	6.2	9.3	12.2	10.0	30.5	17.5	4.3	4.6	11.5	0.6	1.0	M27	0.6	2003
WRBM03016N036410◊‡	36			64.6	29.2	37.0	10.7	-2.4																			2208
WRBM03016N046410◊‡	46			72.8	33.3	45.3	14.8	-4.5																			2360
WRBM03016N066410◊‡	56			81.1	37.4	53.5	18.9	-6.5																			WOR

2721 NE 4th Ave, Pompano, FL 33064 | 1-888-4-A-HOIST

Visit WWW.ACIHOIST.COM for the most current information

Base Mounted Single Reeved 20 Ton

4 Part Single Reeving 4/1

To complete Model Number insert following in place of ◊ / ‡.

◊ S for Single Speed or V for Variable Drive

‡ 4 [for 460/(480) V] or 2 [for 230/(240 V)]

WT (lb): Weight without Variable Drives

Note 1: Control Box can be mounted or shipped on any Base mounted hoist

Note 2: Lifting Speed available in 24 FPM

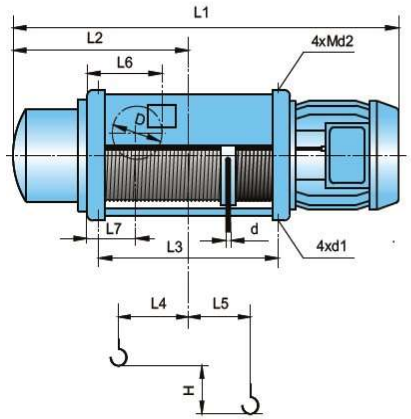

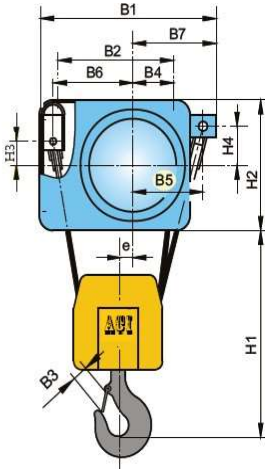

Lift Speed (FPM)	Hoist Motor (HP)	Rated Current	
		240 V (Amp)	480 V (Amp)
16	16.8	74.0	37.0
24	35.4	90.0	45.0

Model Number	Lift (FT)	Lift Speed (FPM)	Rope Dia. (mm)	L1 (in)	L2 (in)	L3 (in)	L4 (in)	L5 (in)	L6 (in)	L7 (in)	B1 (in)	B2 (in)	B3 (in)	B4 (in)	B5 (in)	B6 (in)	B7 (in)	H1 (in)	H2 (in)	H3 (in)	H4 (in)	D (in)	d (in)	d1 (in)	d2	e (in)	Wt (lb)
WRBM04016N02641◊‡	26	16	18	57.5	26.6	28.1	4.0	1.8	19.7	12.8	39.4	18.7	2.8	7.4	11.5	14.5	12.2	32.5	20.9	5.0	5.0	14.2	0.7 (0.6)	1.0	M27	0.9	2068
WRBM04016N03641◊‡	36			65.9	30.9	36.5	8.3	-0.3																			2333
WRBM04016N04641◊‡	46			74.4	35.0	45.0	12.5	-2.4																			2569
WRBM04016N05641◊‡	56			82.7	39.2	53.3	16.6	-4.5																			2862

2721 NE 4th Ave, Pompano, FL 33064 | 1-888-4-A-HOIST

Visit WWW.ACIHOIST.COM for the most current information

Base Mounted Single Reeved 25 Ton

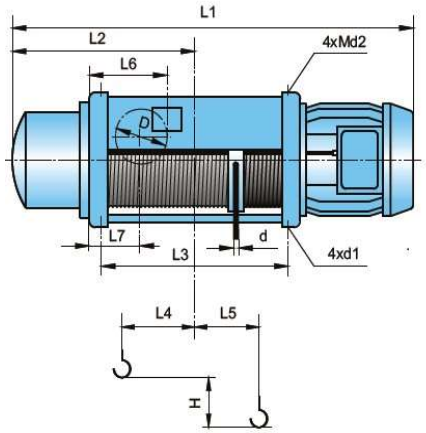

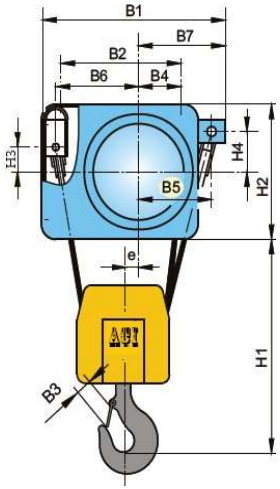

4 Part Single Reeving 4/1

◊ S for Single Speed or V for Variable Drive

‡ 4 [for 460/(480) V] or 2 [for 230/(240 V)]

WT (lb): Weight without Variable Drives

Note 1: Control Box can be mounted or shipped on any Base mounted hoist

Note 2: Lifting Speed available in 19 FPM

Lift Speed (FPM)	Hoist Motor (HP)	Rated Current	
		240 V (Amp)	480 V (Amp)
13	16.8	74.0	37.0
19	35.4	90.0	45.0

Model Number	Lift (FT)	Lift Speed (FPM)	Rope Dia. (mm)	L1 (in)	L2 (in)	L3 (in)	L4 (in)	L5 (in)	L6 (in)	L7 (in)	B1 (in)	B2 (in)	B3 (in)	B4 (in)	B5 (in)	B6 (in)	B7 (in)	H1 (in)	H2 (in)	H3 (in)	H4 (in)	D (in)	d (in)	d1 (in)	d2	e (in)	Wt (lb)
WRBM05013N026410◊‡	26	13	18	59.8	28.7	28.1	4.0	1.8	19.7	12.8	39.4	18.7	3.5	7.4	11.9	15.0	12.6	32.5	22.0	5.0	5.0	14.2	0.7 (0.6)	1.2	----	0.9	2188
WRBM05013N036410◊‡	36			68.3	33.1	36.5	8.3	-0.3																			2453
WRBM05013N046410◊‡	46			76.8	37.2	45.0	12.5	-2.4																			2718
WRBM05013N056410◊‡	56			85.0	41.3	53.3	16.6	-4.5																			2982

2721 NE 4th Ave, Pompano, FL 33064 | 1-888-4-A-HOIST

Visit WWW.ACIHOIST.COM for the most current information

Monorail Trolley Low Headroom Headroom Single 2 Ton

4 Part Single Reeving 4/1

To complete Model Number insert following in place of ◊ / ‡.
◊ S for Single Speed or V for Variable Drive
‡ 4 (for 460/480 V) or 2 (for 230/240 V)
WT (lb): Weight without Variable Drives
Note: Lifting Speed available in 24 FPM
Trolley Speed available in 40 FPM
and 79 FPM.

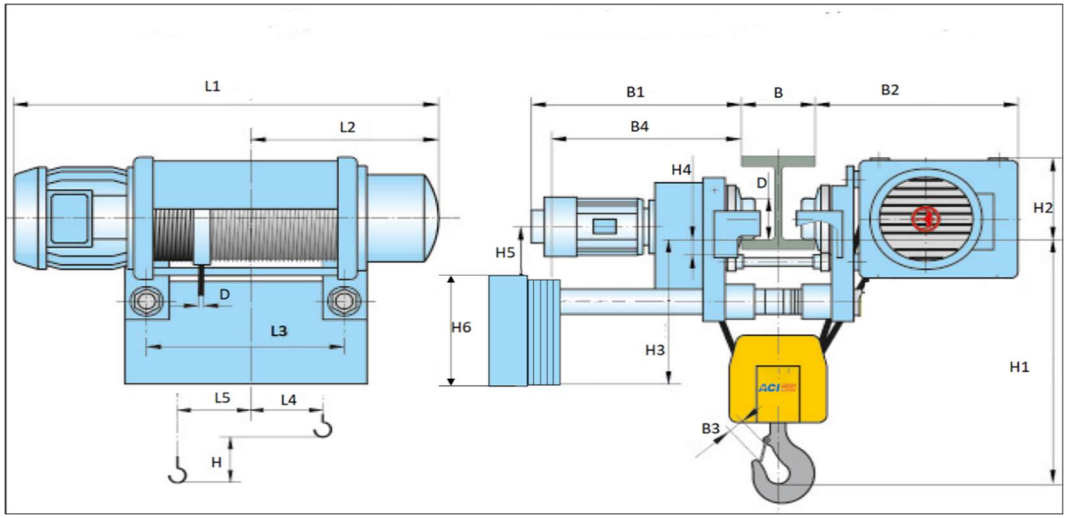

Lift Speed (FPM)	Hoist Motor (HP)	Rated Current	
		240 V (Amp)	480 V (Amp)
16	2.41	10.6	5.3
24	3.67	11.5	5.8

Model Number	Lift (FT)	Lift Speed (FPM)	Rope Dia. (mm)	L1 (in)	L2 (in)	L3 (in)	L4 (in)	L5 (in)	B (in)	B1 (in)	B2 (in)	B3 (in)	B4 (in)	H1 (in)			H2 (in)	H3 (in)	H4 (in)	H5 (in)	H6 (in)	D (in)	d (in)	Wt (lb)
														4	6	12								
WRLH00416S021410◊‡	21	16	7	36.4	16.5	16.9	1.8	1.6	4-12	19.7	18.1	1.6	20.1	15.7	16.7	18.7	6.5	17.3	1.4	9.2	12.2	3.9	0.3	647
WRLH00416S033410◊‡	33			44.3	20.5	24.8	5.8	-0.4																715
WRLH00416S044410◊‡	44			52.2	24.4	32.6	9.7	-2.3																805

2721 NE 4th Ave, Pompano, FL 33064 | 1-888-4-A-HOIST

Visit WWW.ACIHOIST.COM for the most current information

Monorail Trolley Low Headroom Single Reeved 2.5 Ton

4 Part Single Reeving 4/1

To complete Model Number insert following in place of ◊ / ‡.
◊ S for Single Speed or V for Variable Drive
‡ 4 (for 460/(480 V) or 2 (for 230/240 V)
WT (lb): Weight without Variable Drives
Notes: Lifting Speed available in 24 FPM
Trolley Speed available in 40 FPM
and 79 FPM

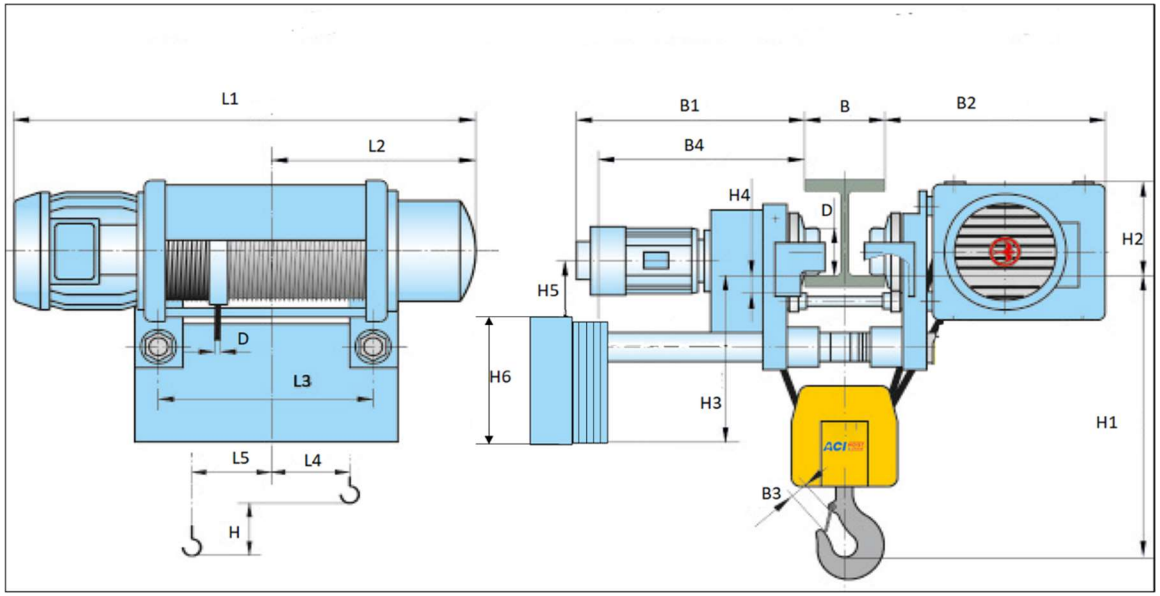

Lift Speed (FPM)	Hoist Motor (HP)	Rated Current	
		240 V (Amp)	480 V (Amp)
16	2.41	10.6	5.3
24	3.67	11.5	5.8

Model Number	Lift (FT)	Lift Speed (FPM)	Rope Dia. (mm)	L1 (in)	L2 (in)	L3 (in)	L4 (in)	L5 (in)	B (in)	B1 (in)	B2 (in)	B3 (in)	B4 (in)	H1 (in)			H2 (in)	H3 (in)	H4 (in)	H5 (in)	H6 (in)	D (in)	d (in)	Wt (lb)
														4	6	12								
WRLH00516S02141◊‡	21	16	7	36.4	16.5	16.9	1.8	1.6	4-12	19.7	18.1	1.6	20.1	15.7	16.7	18.7	6.5	17.3	1.4	9.2	12.2	3.9	0.3	647
WRLH00516S03341◊‡	33			44.3	20.5	24.8	5.8	-0.4																715
WRLH00516S04441◊‡	44			52.2	24.4	32.6	9.7	-2.3																783

2721 NE 4th Ave, Pompano, FL 33064 | 1-888-4-A-HOIST

Visit WWW.ACIHOIST.COM for the most current information

Monorail Trolley Low Headroom Single Reeved 3 Ton

4 Part Single Reeving 4/1

To complete Model Number insert following in place of ◊ / ‡.
◊ S for Single Speed or V for Variable Drive
‡ 4 (for 460/480 V) or 2 (for 230/240 V)
WT (lb): Weight without Variable Drives
Notes: Lifting Speed available in 24 FPM
Trolley Speed available in 40 FPM
and 79 FPM

Lift Speed (FPM)	Hoist Motor (HP)	Rated Current	
		240 V (Amp)	480 V (Amp)
16	4.80	21.0	10.5
24	7.40	22.6	11.3

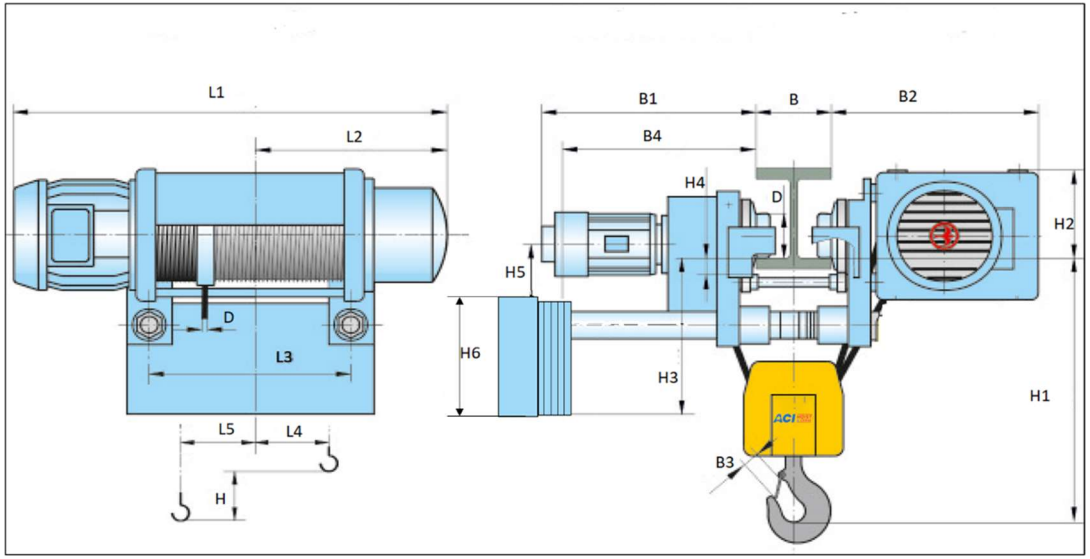

Model Number	Lift (FT)	Lift Speed (FPM)	Rope Dia. (mm)	L1 (in)	L2 (in)	L3 (in)	L4 (in)	L5 (in)	B (in)	B1 (in)	B2 (in)	B3 (in)	B4 (in)	H1 (in)			H2 (in)	H3 (in)	H4 (in)	H5 (in)	H6 (in)	D (in)	d (in)	Wt (lb)
														4	6	12								
WRLH00616S02041◊‡	20	16	10	36.4	16.5	16.9	1.8	1.6	4-12	19.7	18.5	1.8	19.3	19.7	20.7	22.7	6.5	17.3	1.4	9.2	12.2	3.9	0.3	1039
WRLH00616S03141◊‡	31			44.3	20.5	24.8	5.8	-0.4																1123
WRLH00616S04341◊‡	43			52.2	24.4	32.6	9.7	-2.3																1207

2721 NE 4th Ave, Pompano, FL 33064 | 1-888-4-A-HOIST

Visit WWW.ACIHOIST.COM for the most current information

Monorail Trolley Low Headroom Single Reeved 5 Ton

4 Part Single Reeving 4/1

To complete Model Number insert following in place of ◊ / ‡.
◊ S for Single Speed or V for Variable Drive
‡ 4 (for 460/480 V) or 2 (for 230/240 V)
WT (lb): Weight without Variable Drives
Notes: Lifting Speed available in 24 FPM
Trolley Speed available in 40 FPM
and 79 FPM

Lift Speed (FPM)	Hoist Motor (HP)	Rated Current	
		240 V (Amp)	480 V (Amp)
16	4.80	21.0	10.5
24	7.40	22.6	11.3

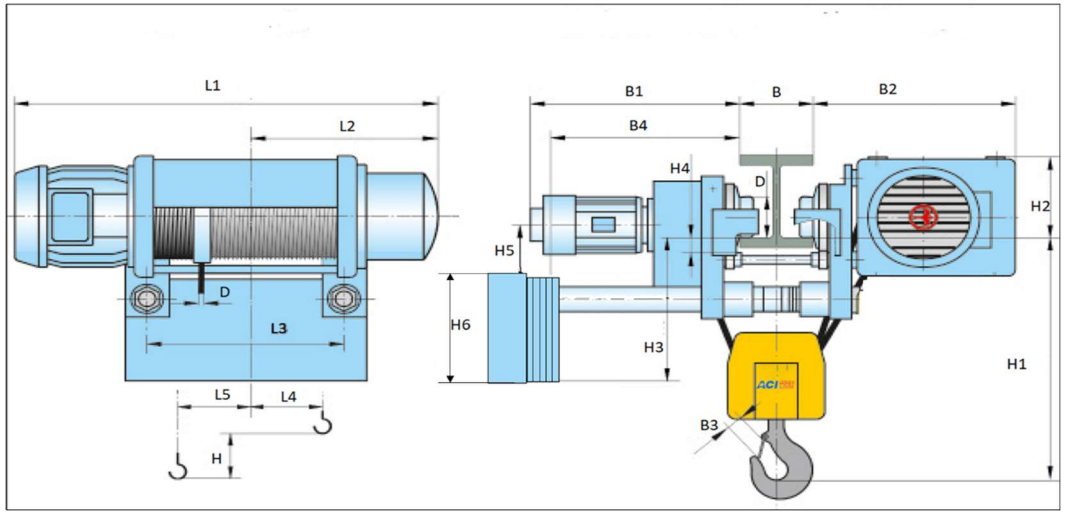

Model Number	Lift (FT)	Lift Speed (FPM)	Rope Dia. (mm)	L1 (in)	L2 (in)	L3 (in)	L4 (in)	L5 (in)	B (in)	B1 (in)	B2 (in)	B3 (in)	B4 (in)	H1 (in)			H2 (in)	H3 (in)	H4 (in)	H5 (in)	H6 (in)	D (in)	d (in)	Wt (lb)
														4	6	12								
WRLH01016S02041◊‡	20	16	10	36.4	16.5	16.9	1.8	1.6	4-12	19.7	18.5	1.8	19.3	19.7	20.7	22.7	6.5	17.3	1.4	9.2	12.2	3.9	0.3	1039
WRLH01016S03141◊‡	31			44.3	20.5	24.8	5.8	-0.4																1123
WRLH01016S04341◊‡	43			52.2	24.4	32.6	9.7	-2.3																1207

2721 NE 4th Ave, Pompano, FL 33064 | 1-888-4-A-HOIST

Visit WWW.ACIHOIST.COM for the most current information

Monorail Trolley Low Headroom Single 7.5 Ton

4 Part Single Reeving 4/1

To complete Model Number insert following in place of ◊ / ‡.
◊ S for Single Speed or V for Variable Drive
‡ 4 (for 460/480 V) or 2 (for 230/240 V)
WT (lb): Weight without Variable Drives
Notes: Lifting Speed available in 24 FPM
Trolley Speed available in 40 FPM and 79 FPM

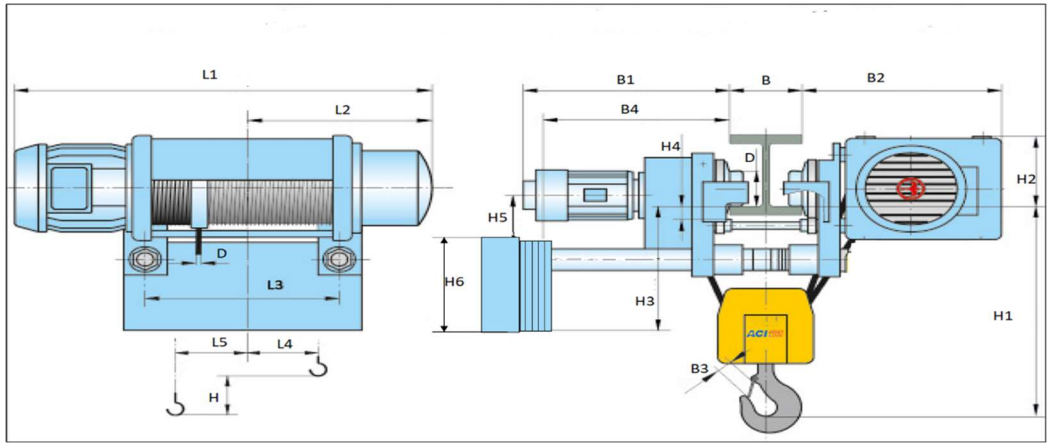

Lift Speed (FPM)	Hoist Motor(HP)	Rated Current	
		240 V (Amp)	480 V (Amp)
16	7.37	24.0	12.0
24	12.1	31.2	15.6

Model Number	Lift (FT)	Lift Speed (FPM)	Rope Dia. (mm)	L1 (in)	L2 (in)	L3 (in)	L4 (in)	L5 (in)	B (in)	B1 (in)	B2 (in)	B3 (in)	B4 (in)	H1 (in)			H2 (in)	H3 (in)	H4 (in)	H5 (in)	H6 (in)	D (in)	d (in)	Wt (lb)
														4	6	12								
WRLH01516S02041◊‡	20	16	12	42.9	19.5	19.3	1.0	2.6	4-12	20.7	20.8	2.2	19.3	26.5	27.5	29.5	7.8	18.3	1.5	10.0	12.2	6.3	0.5 (0.4)	1303
WRLH01516S03041◊‡	30			51.6	23.8	28.0	5.3	0.5																1410
WRLH01516S03941◊‡	39			60.2	28.2	36.7	9.7	-1.7																1515
WRLH01516S04941◊‡	49			68.9	32.5	45.3	14.0	-3.8																1621

2721 NE 4th Ave, Pompano, FL 33064 | 1-888-4-A-HOIST

Visit WWW.ACIHOIST.COM for the most current information

Monorail Trolley Low Headroom Single 10 Ton

4 Part Single Reeving 4/1

To complete Model Number insert following in place of ◊ / ‡.
◊ S for Single Speed or V for Variable Drive
‡ 4 (for 460/480 V) or 2 (for 230/240 V)
WT (lb): Weight without Variable Drives
Notes: Lifting Speed available in 24 FPM
Trolley Speed available in 40 FPM
and 79 FPM

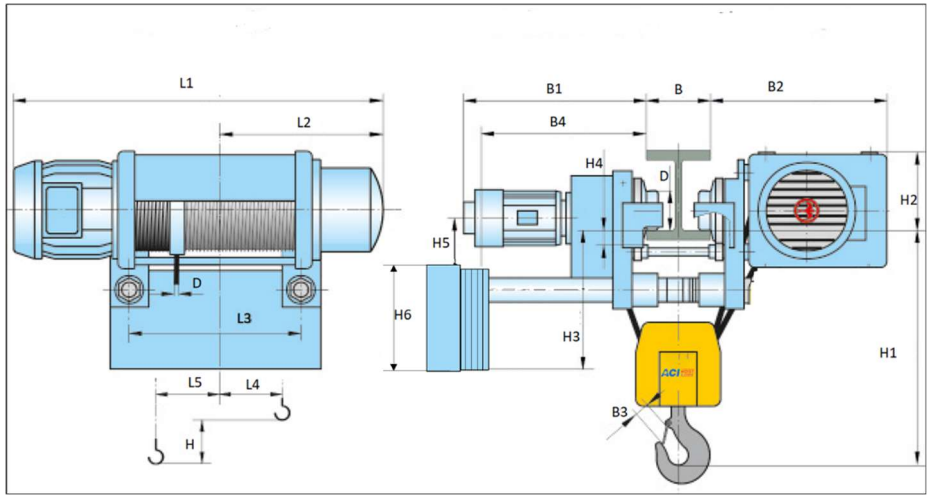

Lift Speed (FPM)	Hoist Motor (HP)	Rated Current	
		240 V (Amp)	480 V (Amp)
16	13	44.9	22.5
24	19.4	57.4	28.0

Model Number	Lift (FT)	Lift Speed (FPM)	Rope Dia. (mm)	L1 (in)	L2 (in)	L3 (in)	L4 (in)	L5 (in)	B (in)	B1 (in)	B2 (in)	B3 (in)	B4 (in)	H1 (in)			H2 (in)	H3 (in)	H4 (in)	H5 (in)	H6 (in)	D (in)	d (in)	Wt (lb)
														4	8	12								
WRLH02016S020410◊‡	20	16	15	44.1	19.9	17.8	-1.3	4.4	4-12	21.7	24.7	2.8	19.5	33.4	34.4	35.4	8.9	19.5	2.4	11.3	12.2	7.9	0.6 (0.5)	2058
WRLH02016S030410◊‡	30			52.4	24.0	26.1	2.8	2.4																2179
WRLH02016S039410◊‡	39			60.6	28.2	34.4	6.9	0.3																2333
WRLH02016S049410◊‡	49			64.8	30.3	38.5	9.0	-0.8																2488
WRLH02016S059410◊‡	59			71.7	33.9	45.4	12.4	-2.4																WOR

2721 NE 4th Ave, Pompano, FL 33064 | 1-888-4-A-HOIST

Visit WWW.ACIHOIST.COM for the most current information

Monorail Trolley Low Headroom Single 15 Ton

4 Part Single Reeving 4/1

To complete Model Number insert following in place of ◊ / ‡.
◊ S for Single Speed or V for Variable Drive
‡ 4 (for 460/480 V) or 2 (for 230/240 V)
WT (lb): Weight without Variable Drives
Notes: Lifting Speed available in 24 FPM
Trolley Speed available in 40 FPM
and 79 FPM

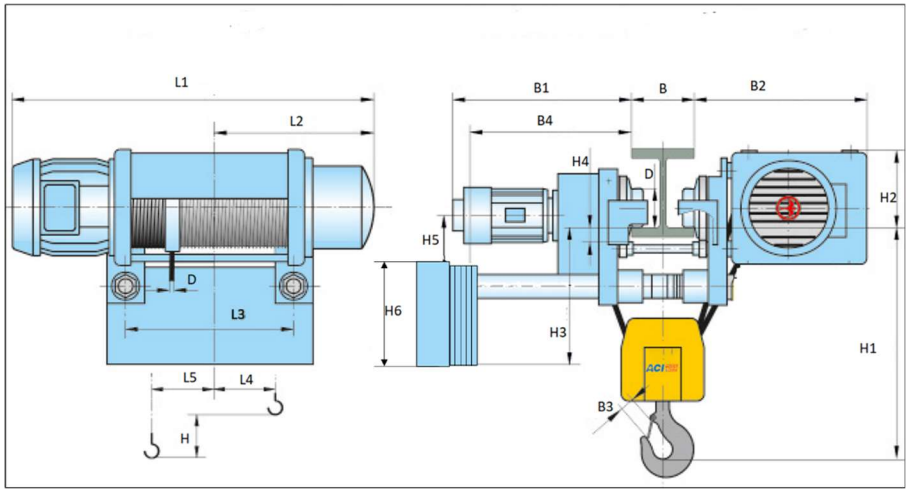

Lift Speed (FPM)	Hoist Motor (HP)	Rated Current	
		240 V (Amp)	480 V (Amp)
16	16.8	74.0	37.0
24	24.9	54.8	27.4

Model Number	Lift (FT)	Lift Speed (FPM)	Rope Dia. (mm)	L1 (in)	L2 (in)	L3 (in)	L4 (in)	L5 (in)	B (in)	B1 (in)	B2 (in)	B3 (in)	B4 (in)	H1 (in)			H2 (in)	H3 (in)	H4 (in)	H5 (in)	H6 (in)	D (in)	d (in)	Wt (lb)
														4	6	12								
WRLH03016S02641◊‡	26	16	18	52.4	24.0	26.1	2.8	2.4	4-12	21.7	24.7	2.8	19.5	36.7	37.7	39.7	8.9	19.5	2.4	11.3	12.2	7.9	0.6 (0.5)	3788
WRLH03016S03641◊‡	36			60.6	28.2	34.4	6.9	0.3																3993
WRLH03016S04641◊‡	46			64.8	30.3	38.5	9.0	-0.8																4198
WRLH03016S05641◊‡	56			71.7	33.9	45.4	12.4	-2.4																4403

2721 NE 4th Ave, Pompano, FL 33064 | 1-888-4-A-HOIST

Visit WWW.ACIHOIST.COM for the most current information

Monorail Trolley Low Headroom Single 20 Ton

4 Part Single Reeving 4/1

To complete Model Number insert following in place of ◊ / ‡.
◊ S for Single Speed or V for Variable Drive
‡ 4 (for 460/480 V) or 2 (for 230/240 V)
WT (lb): Weight without Variable Drives
Notes: Lifting Speed available in 24 FPM
Trolley Speed available in 40 FPM
and 79 FPM

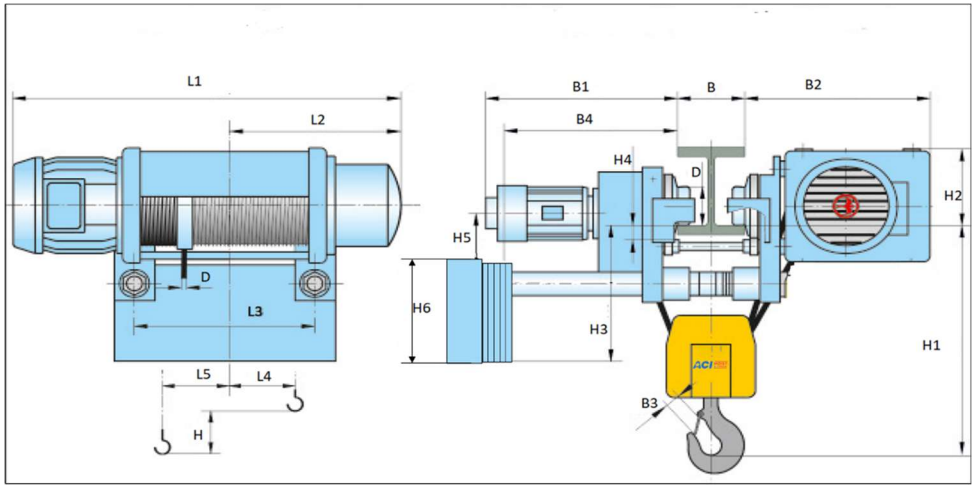

Lift Speed (FPM)	Hoist Motor (HP)	Rated Current	
		240 V (Amp)	480 V (Amp)
16	16.8	74.0	37.0
24	35.4	90.0	45.0

Model Number	Lift (FT)	Lift Speed (FPM)	Rope Dia. (mm)	L1 (in)	L2 (in)	L3 (in)	L4 (in)	L5 (in)	B (in)	B1 (in)	B2 (in)	B3 (in)	B4 (in)	H1 (in)			H2 (in)	H3 (in)	H4 (in)	H5 (in)	H6 (in)	D (in)	d (in)	Wt (lb)
														4	6	12								
WRLH04016S02641◊‡	26	16	18	57.5	26.6	28.1	1.5	3.9	4-12	22.6	30.2	2.8	28.7	36.7	37.7	39.7	11.9	20.7	2.7	12.1	12.2	9.8	0.7 (0.6)	3627
WRLH04016S03641◊‡	36			65.9	30.9	36.5	5.0	2.4																3892
WRLH04016S04641◊‡	46			74.4	35.0	45.0	9.3	0.3																WOR
WRLH04016S05641◊‡	56			82.7	39.2	53.3	13.4	-1.7																WOR

2721 NE 4th Ave, Pompano, FL 33064 | 1-888-4-A-HOIST

Visit WWW.ACIHOIST.COM for the most current information